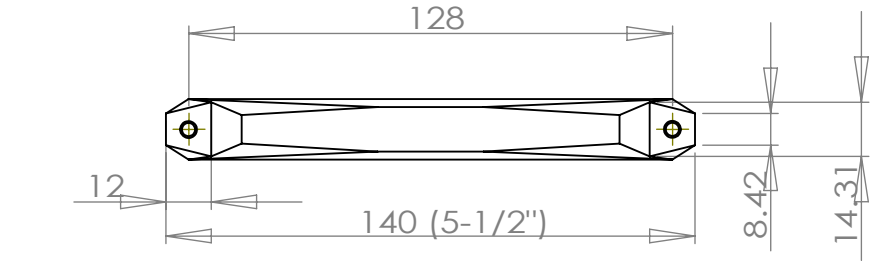

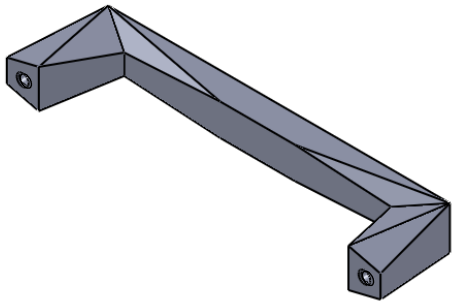

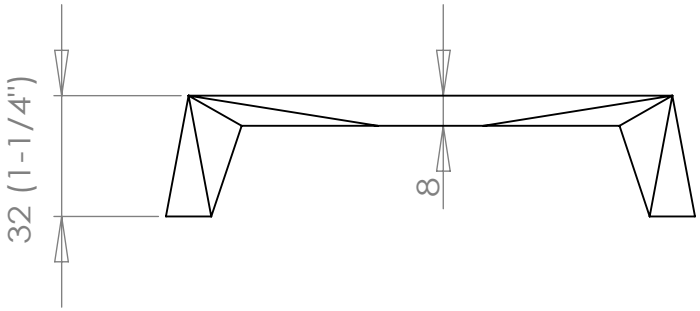

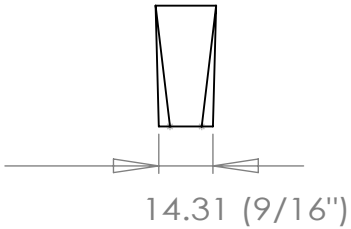

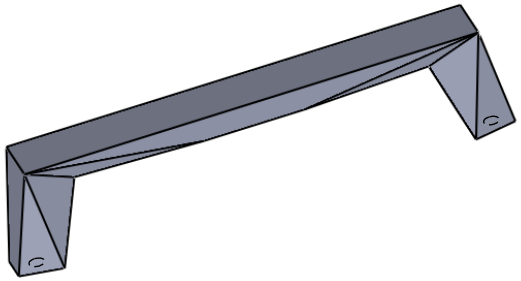

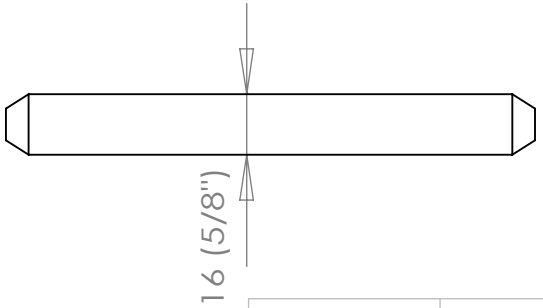

TITLE: 2364-1MDB-P

SIZE: 128mm ctc

COMMENTS: Dimensions in mm

MATERIAL: Zinc

FINISH Brushed Nickel

DO NOT SCALE DRAWING

5 4 3 2 1