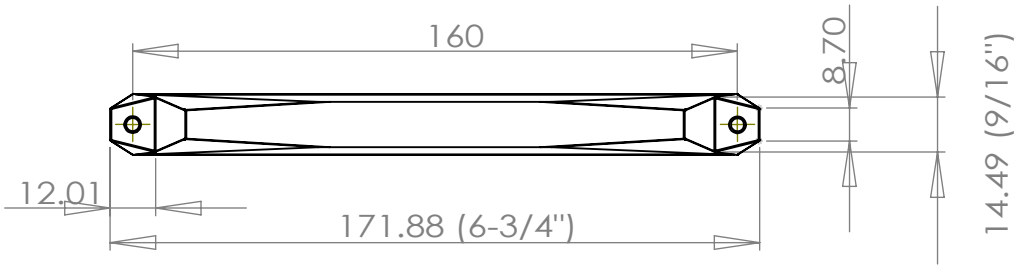

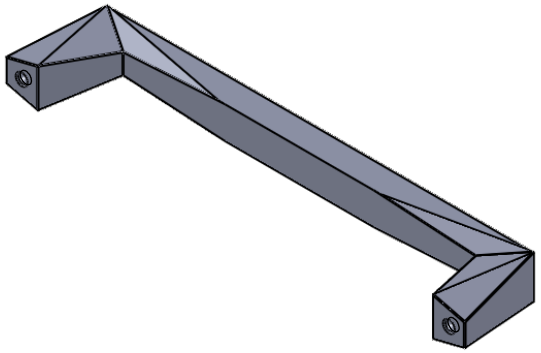

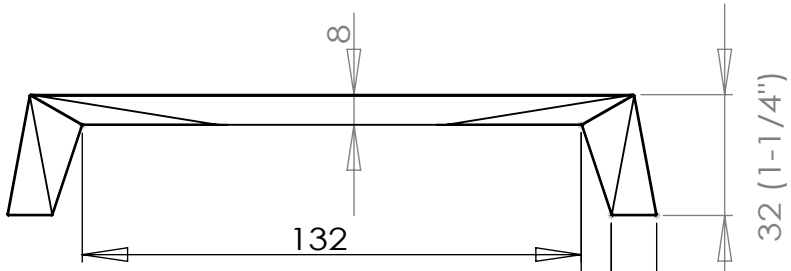

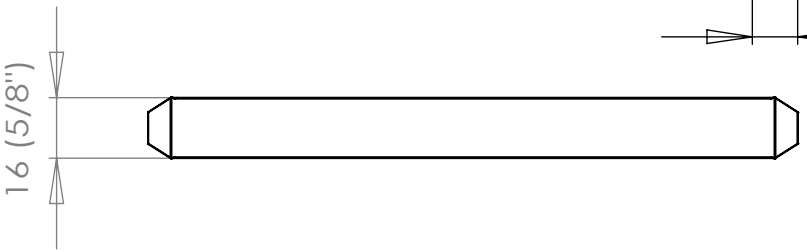

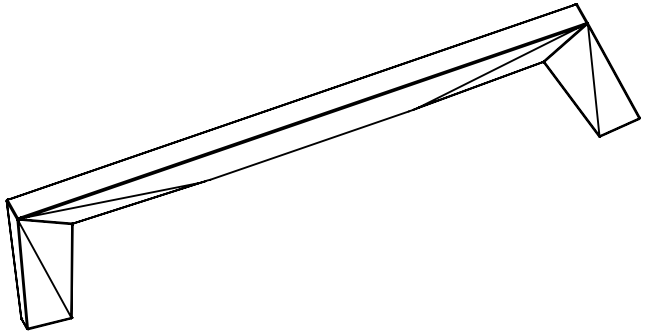

TITLE: 2365-1MDB-P

SIZE: 160mm ctc

COMMENTS: Dimensions in mm

MATERIAL:: Zinc

FINIS: Modern Bronze

DO NOT SCALE DRAWING

5 4 3 2 1