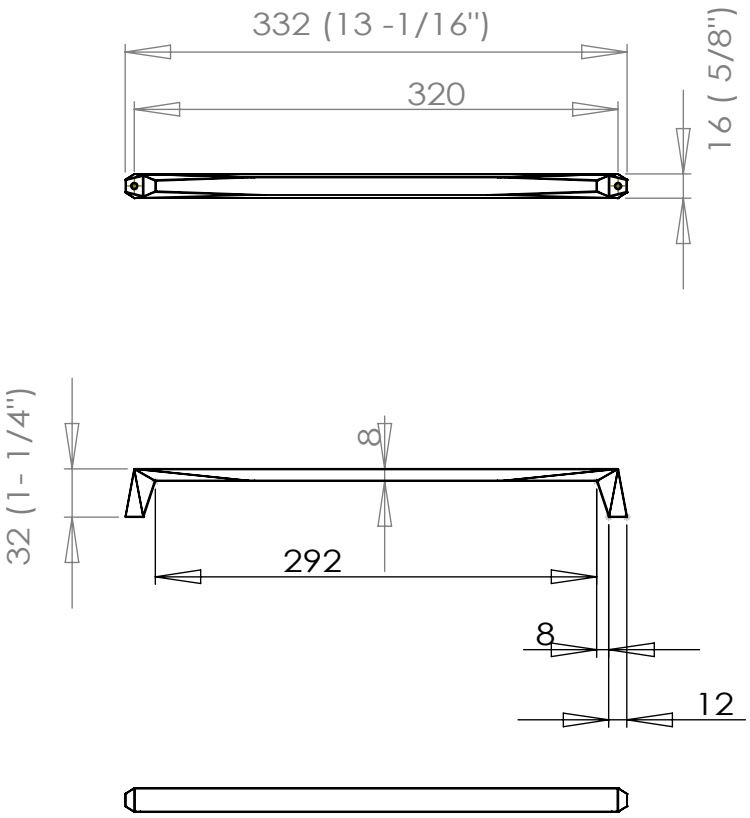

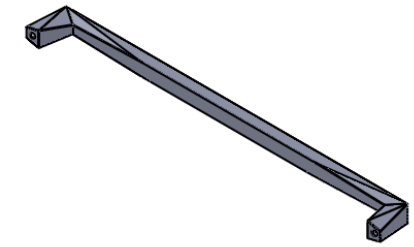

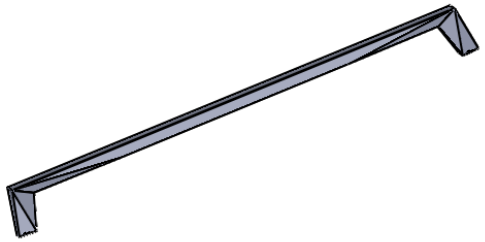

TITLE: 2367-1MDB-P
SIZE: 320mm ctc

COMMENTS: Dimensions in mm

MATERIAL: Zinc

FINISH: Modern Bronze

DO NOT SCALE DRAWING

5 4 3 2 1