Penelope Fold Up Padded Seat
SMPPS-

Features
- Foldable Seat
- Stainless steel mounting bracket for durability
- Holds up to 300lbs. capacity

Warranty
- Lifetime Limited Warranty for residential use
- 5 Year Limited Warranty for commercial use

Colors & Finishes
- 2 seat colors available: White (01) & Black (09)
- 4 bracket finishes available (See below)

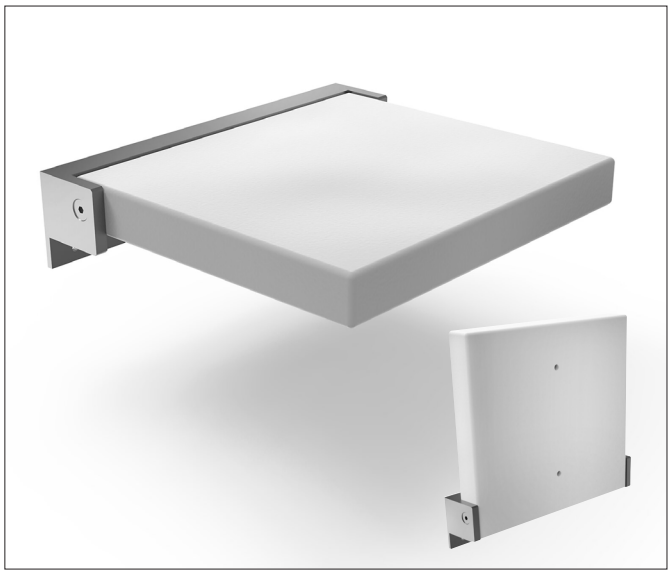

Specified Model

Model	*SMPPS1414UP-
Seat Size	13-13/16"d x 13-9/10"w x 1-13/16"h
Bracket Size	15"w x 3-3/5"h
Shipping Weight	14 lbs.

Model	*SMPPS1420UP-
Seat Size	13-13/16"d x 20"w x 1-13/16"h
Bracket Size	21-1/10"w x 3-3/5"h
Shipping Weight	20 lbs.

add the **finish code after **color code*** (ex: SMPPS1414UP-**01PC**)

To Be Specified:

	Bracket Finishes
❒	**PC** Polished Chrome
❒	**BS** Brushed Steel
❒	**MB** Matte Black
❒	**CB** Champagne Bronze

SMPPS1414UP- available only in Polished Chrome
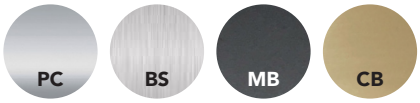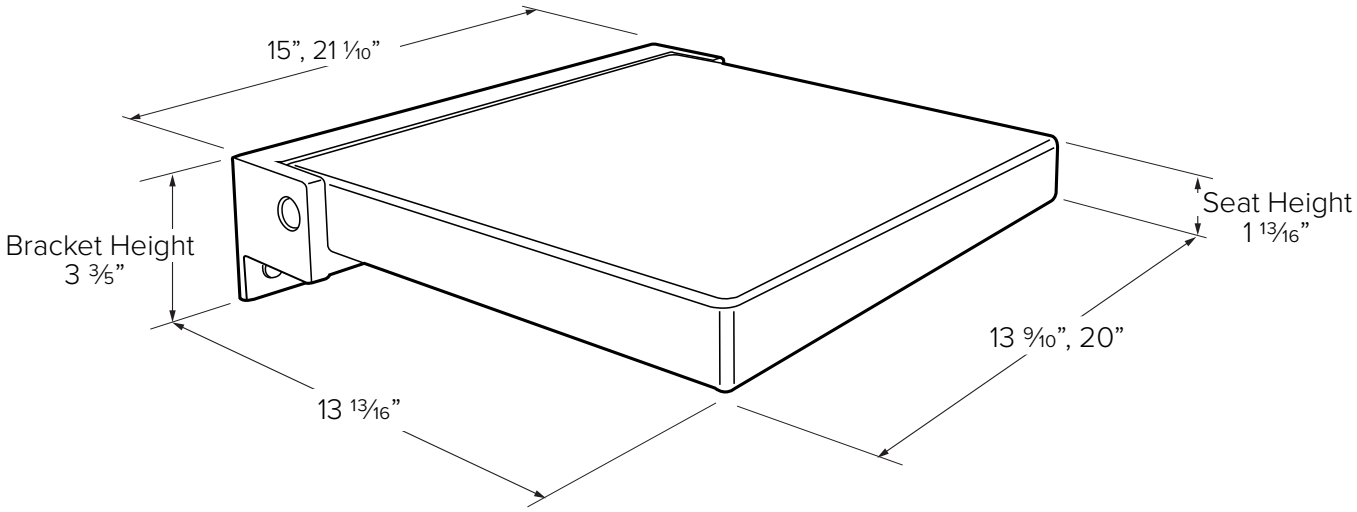
SMPPS1420UP- available in all four finishes