AXOR

Brand	AXOR
Art. Name	**AXOR ShowerSolutions** Showerhead 250 2-Jet with Showerarm Trim, 2.5 GPM
Art. Nr.	35296821
Surface	Brushed Nickel
Pos.	1

Product Picture

Drawing

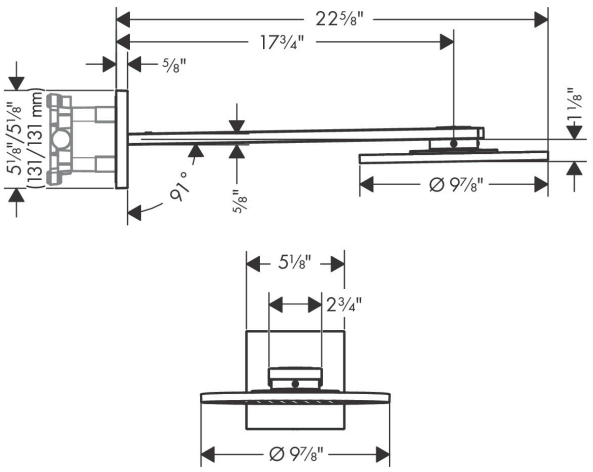

Features

- Consists of: overhead shower, showerarm
- Showerhead size: 250 mm
- Spray pattern: PowderRain, Intense PowderRain
- Maximum flow rate (at 3 bar): 9.5 l/min
- Adjustment with shift on thermostat
- Dynamic spray nozzles move out while using
- Overhead shower removable for cleaning
- ServiceCard with sieve can be removed without tools for cleaning porpose

Technology

Spray Types