Brand	AXOR
Art. Name	**AXOR ShowerSolutions** Showerhead 250 Square 2-Jet with Showerarm Trim, 2.5 GPM
Art. Nr.	35310341
Surface	Brushed Black Chrome
Pos.	1

Product Picture

Drawing

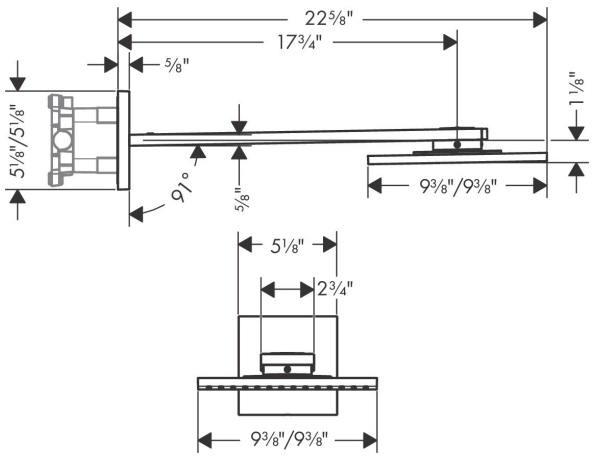

Features

- Consists of: overhead shower, showerarm
- Showerhead size: 250 x 250 mm
- Spray pattern: PowderRain, Intense PowderRain
- Maximum flow rate (at 3 bar): 9.5 l/min
- Select button on thermostat
- Dynamic spray nozzles move out while using
- Overhead shower removable for cleaning
- ServiceCard with sieve can be removed without tools for cleaning porpose
- Connection type: base set

Technology

Spray Types