Brand	AXOR
Art. Name	**AXOR ShowerSolutions** Showerhead 250 Square 2-Jet with Showerarm Trim, 1.75 GPM
Art. Nr.	35311341
Surface	Brushed Black Chrome
Pos.	1

Product Picture

Drawing

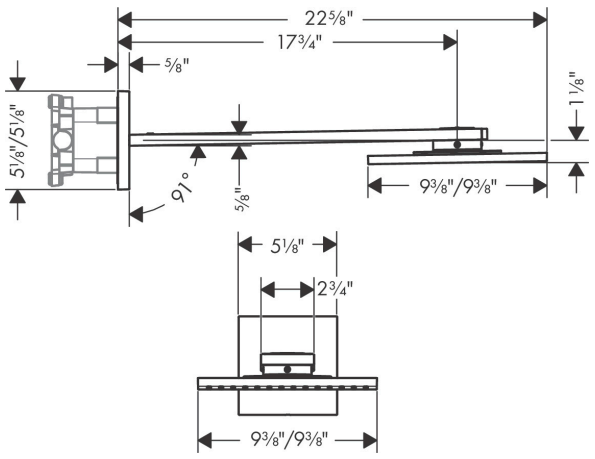

Features

- Consists of: overhead shower, showerarm, green diverter
- Showerhead size: 250 x 250 mm
- Spray pattern: PowderRain, Intense PowderRain
- Maximum flow rate (at 3 bar): 6.6 l/min
- Select button on thermostat
- Dynamic spray nozzles move out while using
- Overhead shower removable for cleaning
- ServiceCard with sieve can be removed without tools for cleaning porpose

Technology

Spray Types