AXOR

hansgrohe

Brand	AXOR
Art. Name	**AXOR One** Showerhead 280 2-Jet with Ceiling Mount Trim, 2.5 GPM
Art. Nr.	48483701
Product Finish	Matte White
Pos.	38

Product Picture

Drawing

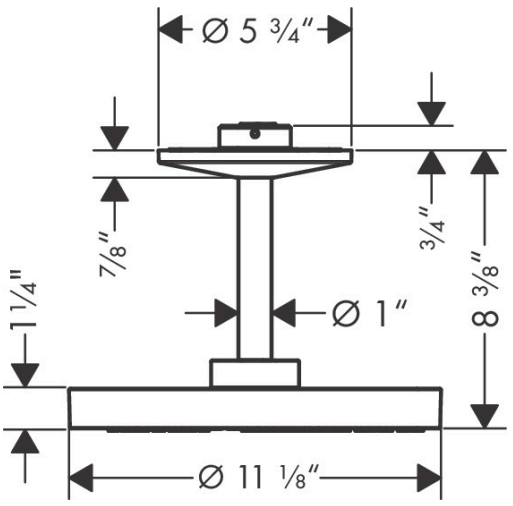

Features

- Consists of: Showerhead, ceiling connector
- Shower head size: 11"
- Spray modes: PowderRain, Rain
- Flow: 2.5 GPM (9.5 L/Min)
- Showerhead removable for cleaning
- Does not include: Rough

Technology

Spray Types