AXOR

hansgrohe

Brand	AXOR
Art. Name	**AXOR One** Wallbar Set 75 1-Jet with Wall Outlet, 2.5 GPM
Art. Nr.	48791701
Product Finish	Matte White
Pos.	47

Product Picture

Drawing

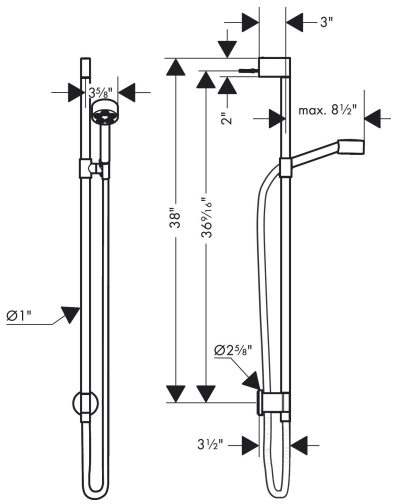

Features

- Consists of: Handshower, Wallbar, Handshower hose, Slider, wall connector
- Spray modes: PowderRain
- Flow: 2.5 GPM (9.5 L/Min)
- Wall mounted: Fastens with screws
- Profile stand pipe: round
- Shower bar diameter: 0.98"
- Pivot connector prevents hose from tangling

Technology

Spray Types