AXOR

Brand	AXOR
Art. Name	**AXOR Citterio C** Widespread Faucet 125 with Escutcheons and Pop-up Drain, 1.2 GPM
Art. Nr.	49060341
Surface	Brushed Black Chrome
Pos.	1

Product Picture

Drawing

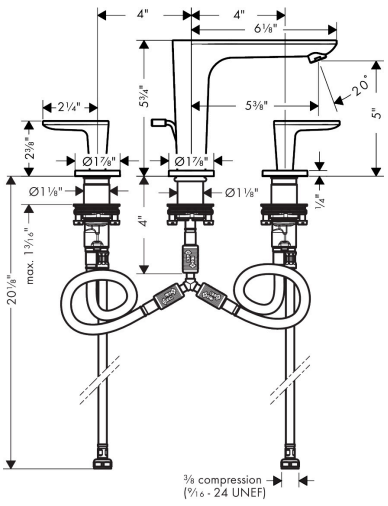

Features

- Consists of: Widespread Faucet, Pop Up Drain
- handle design: lever handle
- Spray pattern: Aerated spray
- Maximum flow rate: 1.2 GPM
- 90-degree ceramic valves
- Pop-Up Drain

Technology

Comfort Zone
AirPower
EcoRight

Certicates/approvals

ADA
WaterSense Meets EPA Criteria Certified by IAPMO R&T
MAP
UPC C ®