AXOR

Brand	AXOR
Art. Name	**AXOR Citterio C** Widespread Faucet 125 with Escutcheons and Pop-up Drain, Cubic Cut, 1.2 GPM
Art. Nr.	49061341
Surface	Brushed Black Chrome
Pos.	1

Product Picture

Features

- Consists of: Widespread Faucet, Pop Up Drain
- handle design: lever handle
- Spray pattern: Aerated spray
- Maximum flow rate: 1.2 GPM
- 90-degree ceramic valves
- Pop-Up Drain

Drawing

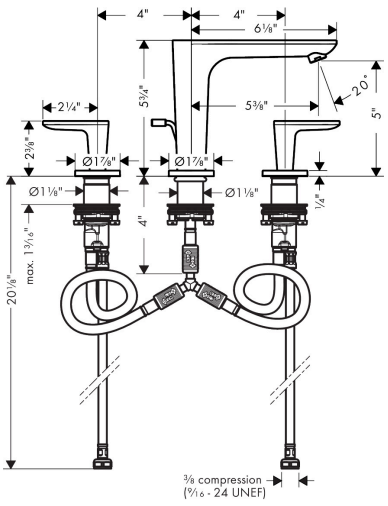

Technology

Certicates/approvals