Brand	hansgrohe
Art. Name	**Talis C** Single-Hole Faucet 80 with Pop-Up Drain, 1.2 GPM
Art. Nr.	14111821
Surface	Brushed Nickel
Pos.	1

Product Picture

Drawing

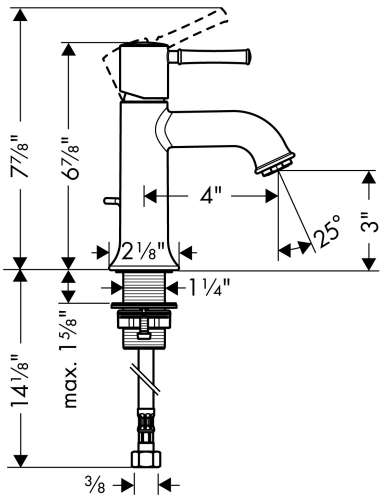

Features

- Handle design: pin handle
- Spray pattern: aerated spray
- Maximum flow rate (at 3 bar): 4.5 l/min
- Ceramic cartridge
- Pop-up drain G 1

Technology

Comfort Zone

Quick Clean

EcoRight