Brand	hansgrohe
Art. Name	**PuraVida** Widespread Faucet 110, 1.2 GPM
Art. Nr.	15073001
Surface	Chrome
Pos.	1

Product Picture

Drawing

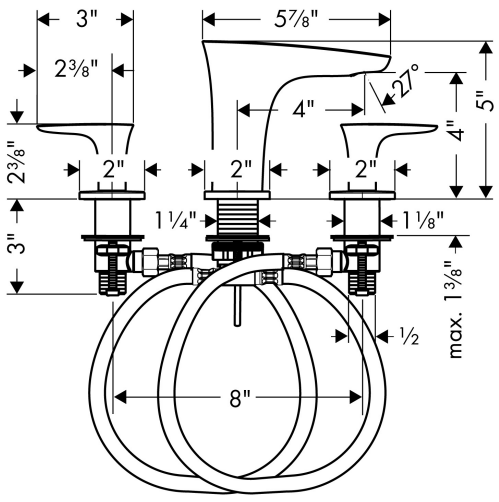

Features

- Handle design: lever handle
- Spray pattern: Laminar spray, Laminar spray
- Swiveling spray former
- Maximum flow rate (at 3 bar): 4.5 l/min
- Ceramic valves hot/cold 90°

Technology

Comfort Zone

Quick Clean

EcoRight