Brand	hansgrohe
Art. Name	**Rainfinity** Showerhead 250 3-Jet with Wall Connector Trim, 2.5 GPM
Art. Nr.	26232141
Surface	Brushed Bronze
Pos.	1

Product Picture

Drawing

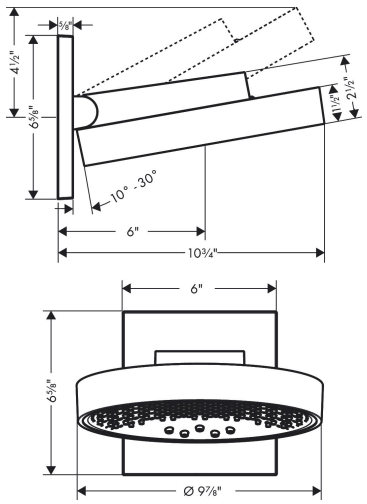

Features

- Consists of: showerhead, wall outlet, green diverter
- showerhead size: 9 7/8”
- Spray pattern: PowderRain, Intense PowderRain, RainStream
- Maximum flow rate: 2.5 GPM
- Select button on thermostat
- Projection: 10 3/4”
- middle spray disc: 6”
- spray disc surface: graphite
- Showerhead removable for cleaning
- showerarm vertically adjustable by 10-30°
- the 3 spray zones must be controlled via 3 valves or a diverter valve with 3 outlets
- Connection type: rough

Technology

Spray Types

Certicates/approvals