Brand	hansgrohe
Art. Name	Soap Dispenser, Contemporary
Art. Nr.	04539670
Surface	Matte Black
Pos.	1

Product Picture

Drawing

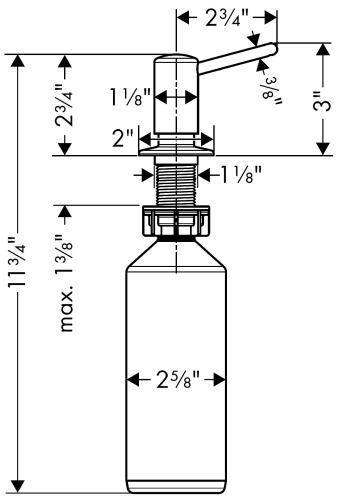

Features

- metal
- non-corroding spout tube
- Filling capacity 17 oz
- 1⅜" maximum counter depth