Brand	hansgrohe
Art. Name	**Joleena** Semi-Pro Kitchen Faucet, 2-Spray, 1.75 GPM
Art. Nr.	04792800
Surface	Stainless Steel Optic
Pos.	1

Product Picture

Drawing

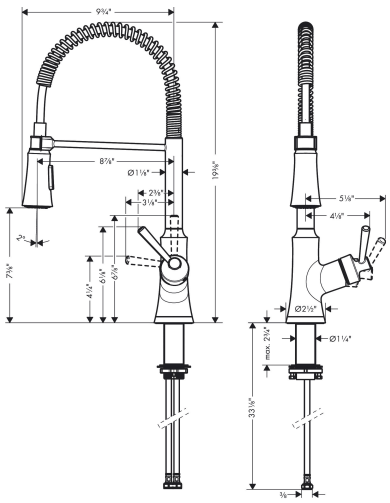

Features

- Swivel range 360°
- Aerated spray, shower spray
- Toggle spray diverter with pause feature (allows temporary stop of water stream)
- MagFit magnetic shower holder
- Deck-mounted
- Maximum flow rate (at 3 bar): 6.6 l/min
- Ceramic cartridge
- G ⅜ hose connections
- Integrated non-return valve
- Single handle kitchen faucet, fixation set, installation manual

Technology

Spray Types