Brand	hansgrohe
Art. Name	**Joleena** HighArc Kitchen Faucet, 2-Spray Pull-Down, 1.75 GPM
Art. Nr.	04793250
Surface	Brushed Gold Optic
Pos.	1

Product Picture

Drawing

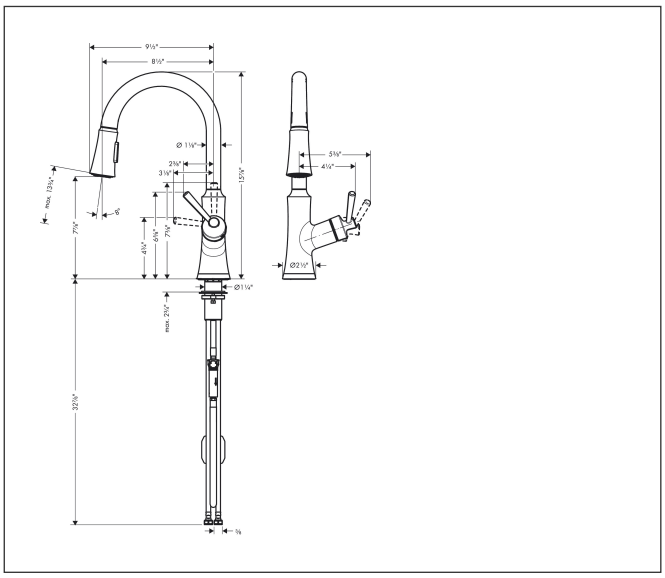

Features

- swivel range 150°
- Aerated spray, handshower spray
- Toggle spray diverter with pause feature (allows temporary stop of water stream)
- MagFit magnetic handspray holder
- deck-mounted
- Maximum flow rate: 1.75 GPM
- ceramic cartridge
- G ⅜ hose connections
- integrated backflow prevention
- Extension length up to 14 1/2"
- Pull-Out Kitchen Faucet, connection hoses, fixation set, installation manual

Technology

Spray Types

Certicates/approvals

ADA