Brand	hansgrohe
Art. Name	**Locarno** 3-Hole Roman Tub Set Trim
Art. Nr.	04816140
Surface	Brushed Bronze
Pos.	1

Product Picture

Drawing

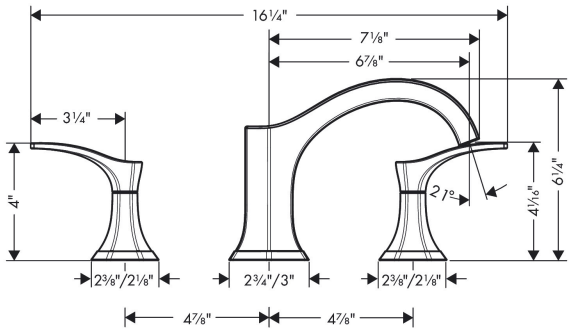

Features

- Maximum flow rate: 5.8 GPM
- ceramic valves 90°

Technology

EcoRight