| | |
|---|---|
| Brand | hansgrohe |
| Art. Name | **Raindance S** Thermostatic Showerhead/Wallbar Set with Rough, 2.5 GPM |
| Art. Nr. | 04915820 |
| Surface | Brushed Nickel |
| Pos. | 1 |

## Product Picture

## Drawing

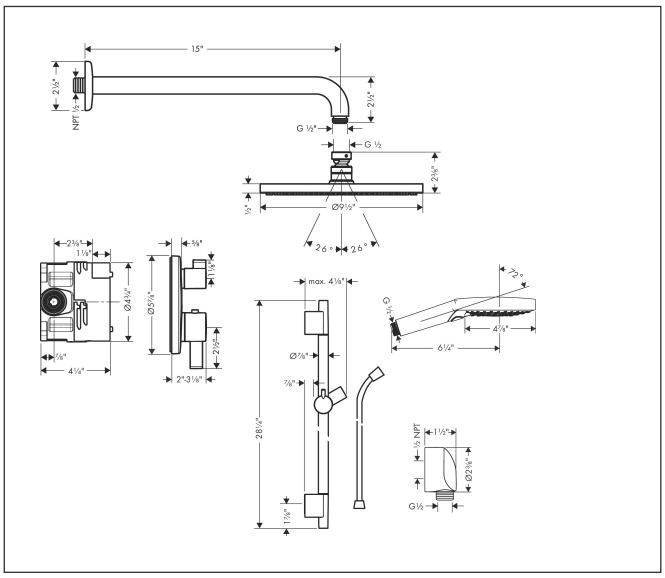


## Features

- Consists of: overhead shower, Handshower, shower bar, showerarm, wall outlet, Thermostat, base set, shower hose
- Showerhead size: 240 mm
- Spray type overhead shower: PowderRain
- Spray type handshower: PowderRain, Rain, Whirl
- Maximum flow rate (at 3 bar): 9.5 l/min
- Handshower holder of plastic
- Profile pipe: round
- Pivot connector prevents hose from tangling
- Use of outlets: Volume control and diverter for 2 outlets

## Technology

## Spray Types