AXOR

hansgrohe

Brand	hansgrohe
Art. Name	**Tecturis S** Freestanding Tub Filler with 1.75 GPM Handshower
Art. Nr.	73440671
Product Finish	Matte Black
Pos.	20

Product Picture

Drawing

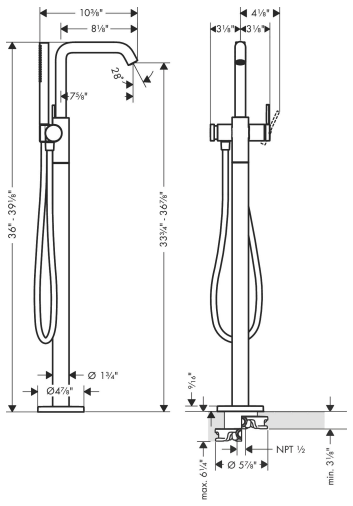

Features

- Consists of: Freestanding tub filler trim, Baton handshower, Handshower hose, Handshower holder
- Spray type mixer: aerated spray
- Spray type hand shower: Rain, Mono
- Flow rate of hand shower at 3 bar: 1.75 GPM (6.6 L/Min)
- Ceramic cartridge
- Pressure diverter Select with automatic resetting
- Integrated double backflow prevention
- No additional maintenance opening required

Technology

AirPower

Select

Spray Types

Mono

Rain