AXOR

hansgrohe

Brand	hansgrohe
Art. Name	**Aquno Select** Kitchen Faucet, 2-Spray Pull-Out, 1.75 GPM
Art. Nr.	73836251
Surface	brushed gold optic
Pos.	1

Product Picture

Drawing

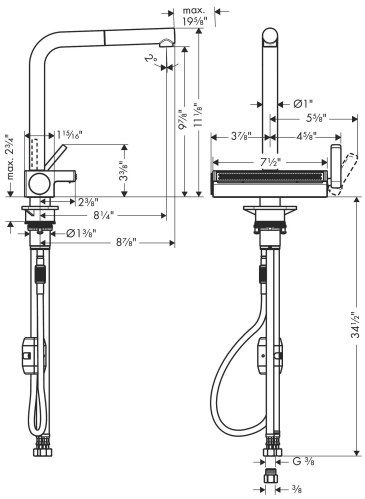

Features

- Swivel range Adjustable in 3 steps: 60°, 110° or 150°
- Laminar spray, SatinFlow
- Change between SatinFlow and pull-out sprayer at the touch of a button
- MagFit magnetic sprayhead docking
- Deck mounted, Recommendation: the middle of tap hole drilling should be max. 50 mm from the back side of of the bowl
- Flow: 1.75 GPM (6.6 L/Min)
- Ceramic cartridge
- ⅜" connections
- Integrated double backflow prevention
- Extension length Up to 30" (50cm)
- 1 ⅜" Mounting hole required, Recommendation: the middle of tap hole drilling should be max. 50 mm from the back side of of the bowl

Technology

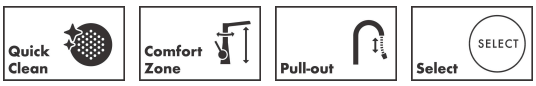
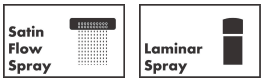
Spray Types