Brand	hansgrohe
Art. Name	**Aquno Select** Kitchen Faucet, 2-Spray Pull-Out, 1.75 GPM
Art. Nr.	73836801
Surface	Stainless Steel Finish
Pos.	1

DESIGN AWARD 2020

Best of the Best

reddot winner 2020
best of the best

Product Picture

Drawing

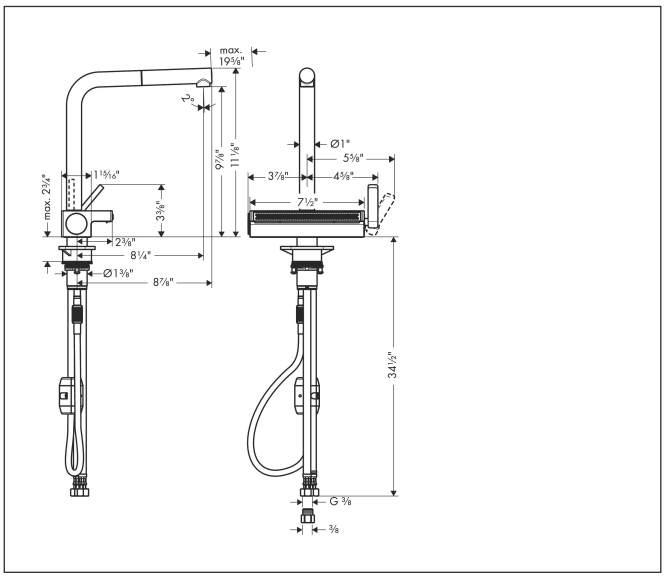

Features

- Swivel range can be adjusted in 3 steps 60°, 110° or 150°
- Laminar spray, SatinFlow
- Change between SatinFlow and pull-out spout at the touch of a button
- MagFit magnetic shower holder
- Deck-mounted
- Maximum flow rate (at 3 bar): 6.6 l/min
- Ceramic cartridge
- G ⅜ hose connections
- Integrated non-return valve
- Extension length up to 50 cm
- Recommendation: the middle of tap hole drilling should be max. 50 mm from the back side of of the bowl
- Single handle kitchen faucet, connection hoses, fixation set, mounting material, installation manual

Technology

Select | Pull-out | Comfort Zone | Mag Fit | Quick Clean

EcoRight

Spray Types

Satin Flow Spray | Laminar Spray