Brand	hansgrohe
Art. Name	**Aquno Select** HighArc Kitchen Faucet, 3-Spray Pull-Down, 1.75 GPM
Art. Nr.	73837801
Surface	Stainless Steel Finish
Pos.	1

DESIGN AWARD 2020

Best of the Best

reddot winner 2020
best of the best

Product Picture

Drawing

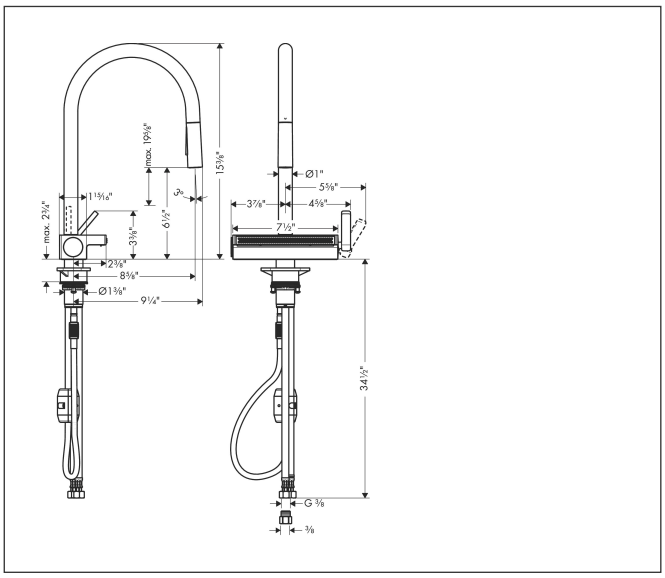

Features

- Swivel range can be adjusted in 3 steps 60°, 110° or 150°
- Laminar spray, shower spray, SatinFlow
- Change between SatinFlow and pull-out spout at the touch of a button
- Lockable shower spray, spray return through pressing spray diverter
- MagFit magnetic shower holder
- Deck-mounted
- Maximum flow rate (at 3 bar): 6.6 l/min
- Ceramic cartridge
- G ⅜ hose connections
- Integrated non-return valve
- Extension length up to 50 cm
- Recommendation: the middle of tap hole drilling should be max. 50 mm from the back side of of the bowl
- Single handle kitchen faucet, connection hoses, fixation set, mounting material, installation manual

Technology

Select · Pull-out · Comfort Zone · Mag Fit · Quick Clean · EcoRight

Spray Types

Satin Flow Spray · Shower Spray · Laminar Spray