Brand	hansgrohe
Art. Name	**Metropol** Widespread Faucet 110 with Loop Handles and Pop-Up Drain, 1.2 GPM
Art. Nr.	74516001
Surface	Chrome
Pos.	1

Product Picture

Features

- Handle design: Flat handle
- Spray pattern: aerated spray
- Maximum flow rate (at 3 bar): 4.5 l/min
- Ceramic valves hot/cold 90°
- Pop-up drain G 1

Drawing

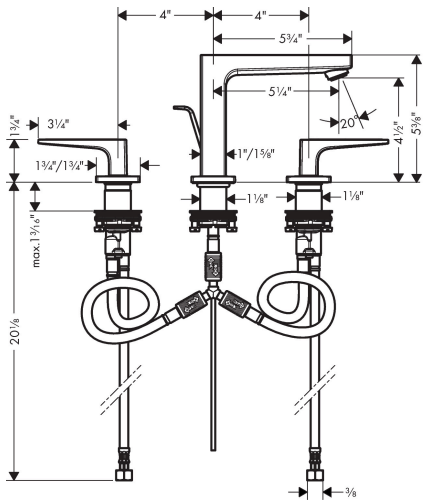

Technology