Trimslate Elite Zero Threshold FZSE Center Drain

Features

- Low profile single, double or peninsula shower base with natural stone effect.
- Ultra low 1” threshold front curb for easy access and finishes flush with most finished floors.
- Heavy duty Sheet Molding Compound material.
- Installation for new and existing contruction.
- 1” high aluminum tiling flange included.
- Bases can be trimmed in the field to fit your space.
- Select from single, double or peninsula threshold.
- Slip resistant; lightly textured slate floor for a safe environment yet maintains an easy to clean surface.
- Color-matched SMC drain cover. (48" bases come with a 7-1/2" long drain cover. 60" and 72" bases come with a 29-7/16" long drain cover). Drain not included.
- Weight capacity of 660 pounds.
- Optional threshold can be added to form a conventional base. Design is similar to other Trimslate bases and will accommodate the current add-on threshold.
- 10 Year Limited Residential / 3 Year Commercial Warranty

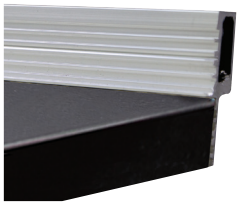

Tiling flange

Modern Slip Resistance with a stone look texture. Easy to clean as well as slip resistant.

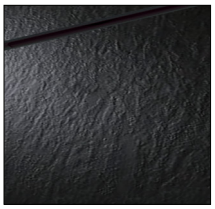

Specified Models

	Model No.	Length A	Width B	Ctr C	Ctr D	Height	Ship Wt. (lbs)
❒	FZSE4836C-	47.2"	35.5"	23.60"	17.75"	1”	39.46
❒	FZSE6036C-	59.1”	35.5"	29.55"	17.75"	1”	48.28
❒	FZSE6042C-	59.1"	41.5"	29.55"	20.75"	1”	55.67
❒	*FZSE7248C-	70.9"	47.5"	35.45"	23.75"	1”	81.24

* Meets ADA requirements.

CUSTOMIZABLE BASE

Note: Bases can be built to accommodate unique sizes. Notches can also be cut from the bases to allow for columns in a corner.

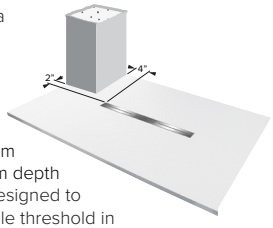

Base can be built to custom sizes within certain limitations. Can be trimmed up to 4” in width away from either side of drain or up to 2" from depth on center drain models. Base is designed to be used as a single, double or triple threshold in stock sizes.

SHOWER BASES

To Be Specified: Color

❒	**31** White
❒	**32** Cameo
❒	**33** Beach
❒	**40** Dark Grey
❒	**09** Black

White **31** Cameo **32** Beach **33**

Dark Grey **40** Black **09**

NSF C US U.P. Code CSA B45.5/IAPMO Z124

Compliance Certifications- Meet or Exceed the Following Specifications:

IAPMO

Notes: Install this product according to the installation instructions.

Trimslate Elite Zero Threshold FZSE Center Drain

Specified Model: FZSE4836C-

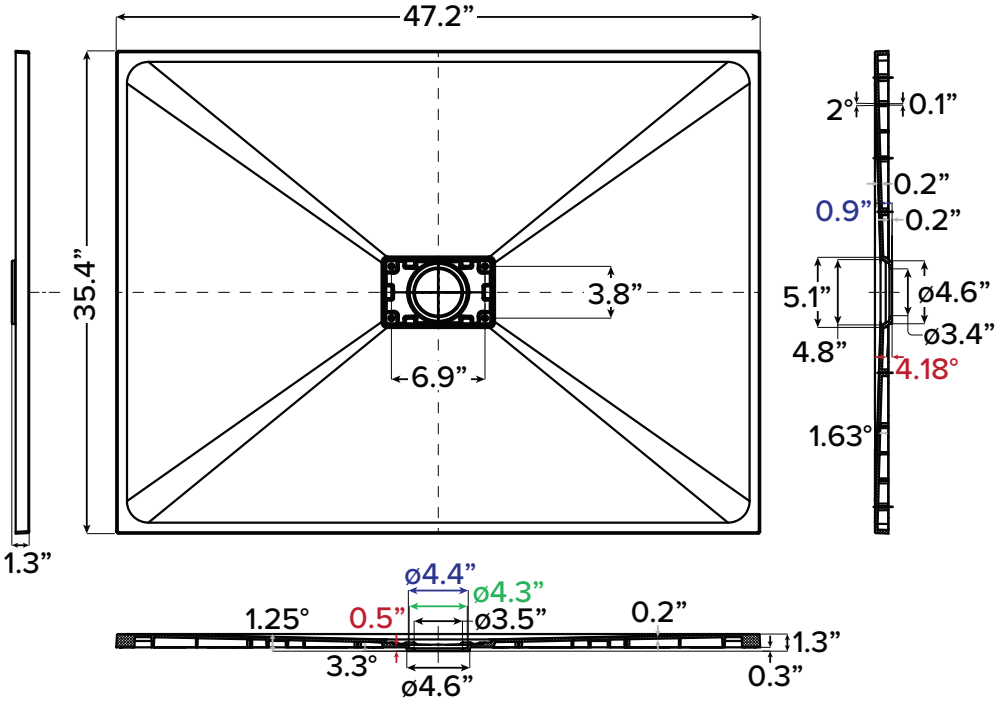

Specified Models: FZSE6036C-, FZSE6042C-, FZSE7248C-

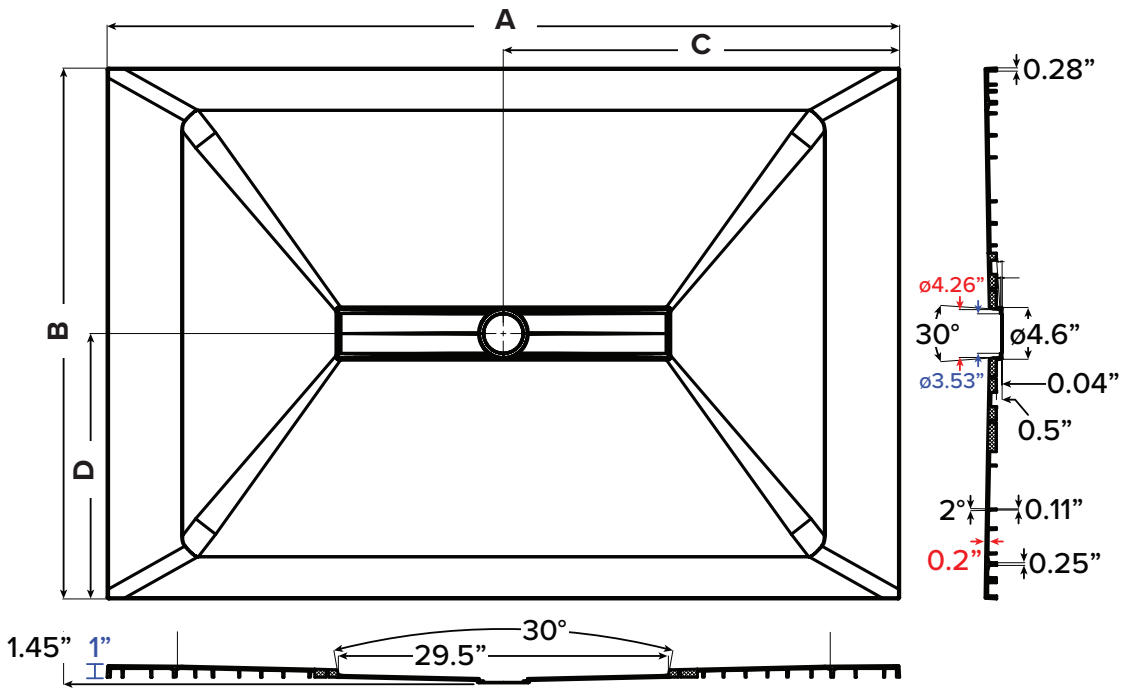

A.	59.1”
	59.1”
	70.9”
B.	35.5”
	41.5”
	47.5”
C.	29.55”
	29.55”
	35.45”
D.	17.75”
	20.75”
	23.75”

SHOWER BASES